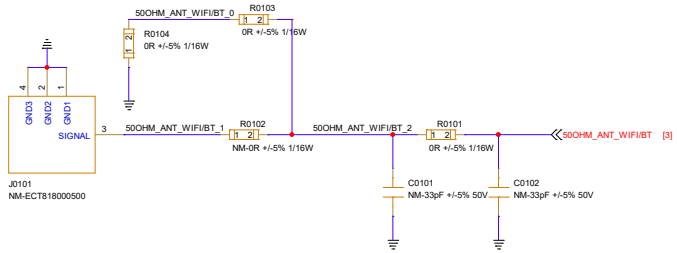

Organization	Quectel Wireless Solutions		
Project	Quectel Pi H1	Ver	V1.3
Drawn By	Weida LIU/Elliot LI	Checked By	Zac WANG
Size	A2		
Date:	Friday, November 28, 2025	Sheet 1 of 25	

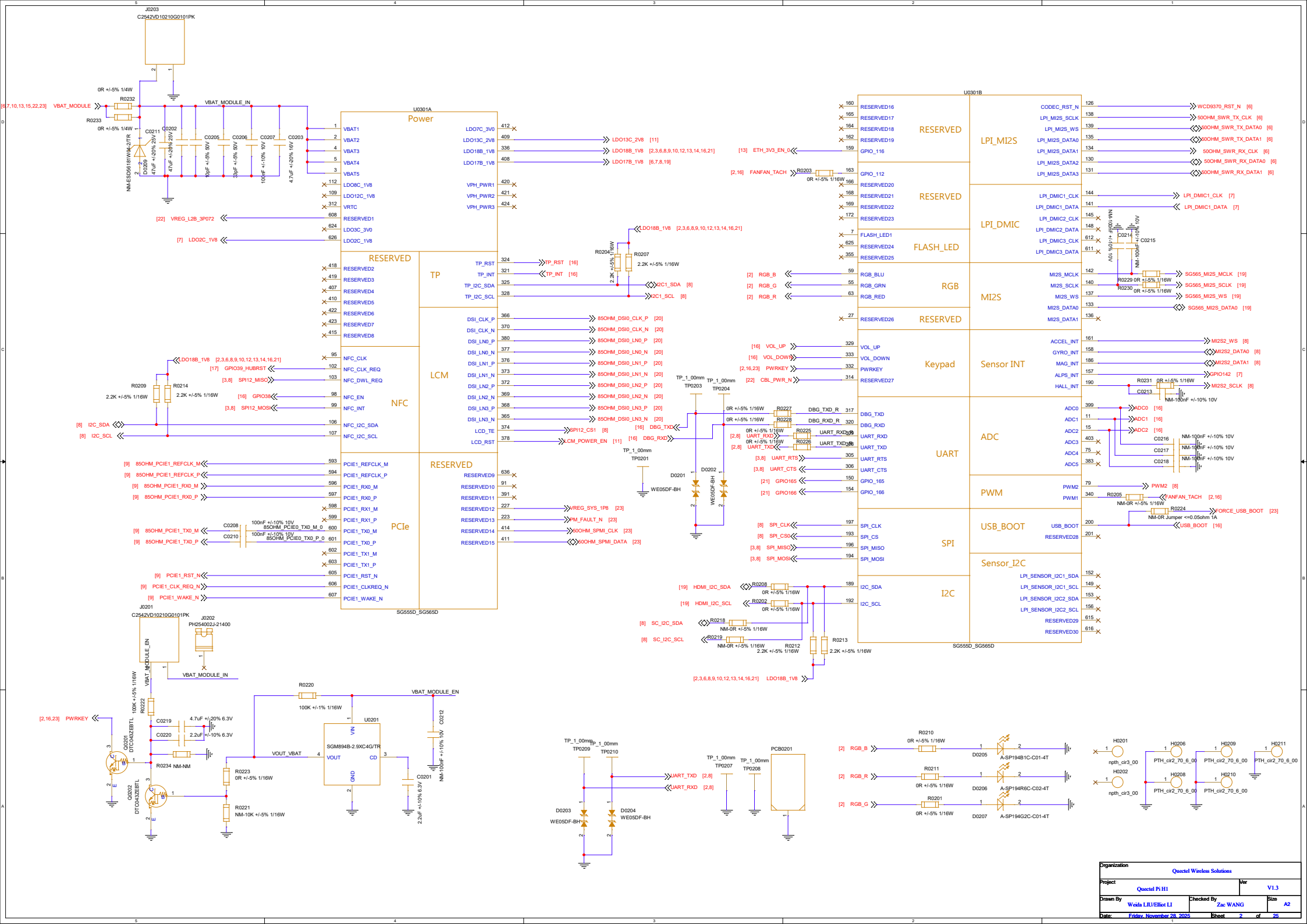
J0203
C2542VD10210G0101PK
0R +/-5% 1/4W
R0232
R0233
[6,7,10,13,15,22,23] VBAT_MODULE
VBAT_MODULE_IN
C0211
C0202
C0205
C0206
C0207
C0203
D0209
NM-ESD56181W4-2/TR
47uF +/-20% 25V
47uF +/-20% 25V
60pF +/-5% 50V
33pF +/-5% 50V
100nF +/-10% 10V
4.7uF +/-20% 16V
U0301A
Power
VBAT1
VBAT2
VBAT3
VBAT4
VBAT5
LDO8C_1V8
LDO12C_1V8
VRTC
RESERVED1
LDO3C_3V0
LDO2C_1V8
[22] VREG_L2B_3P072
[7] LDO2C_1V8
LDO7C_3V0
LDO13C_2V8
LDO18B_1V8
LDO17B_1V8
LDO13C_2V8 [11]
LDO18B_1V8 [2,3,6,8,9,10,12,13,14,16,21]
LDO17B_1V8 [6,7,8,19]
VPH_PWR1
VPH_PWR2
VPH_PWR3
RESERVED
RESERVED2
RESERVED3
RESERVED4
RESERVED5
RESERVED6
RESERVED7
RESERVED8
TP
TP_RST
TP_INT
TP_I2C_SDA
TP_I2C_SCL
TP_RST [16]
TP_INT [16]
I2C1_SDA [8]
I2C1_SCL [8]
R0204
2.2K +/-5% 1/16W
R0207
2.2K +/-5% 1/16W
LDO18B_1V8 [2,3,6,8,9,10,12,13,14,16,21]
LCM
DSI_CLK_P
DSI_CLK_N
DSI_LN0_P
DSI_LN0_N
DSI_LN1_P
DSI_LN1_N
DSI_LN2_P
DSI_LN2_N
DSI_LN3_P
DSI_LN3_N
LCD_TE
LCD_RST
85OHM_DSI0_CLK_P [20]
85OHM_DSI0_CLK_N [20]
85OHM_DSI0_LN0_P [20]
85OHM_DSI0_LN0_N [20]
85OHM_DSI0_LN1_P [20]
85OHM_DSI0_LN1_N [20]
85OHM_DSI0_LN2_P [20]
85OHM_DSI0_LN2_N [20]
85OHM_DSI0_LN3_P [20]
85OHM_DSI0_LN3_N [20]
SPI12_CS1 [8]
LCM_POWER_EN [11]
NFC
NFC_CLK
NFC_CLK_REQ
NFC_DWL_REQ
NFC_EN
NFC_INT
NFC_I2C_SDA
NFC_I2C_SCL
LDO18B_1V8 [2,3,6,8,9,10,12,13,14,16,21]
[17] GPIO39_HUBRST
[3,8] SPI12_MISO
[16] GPIO38
[3,8] SPI12_MOSI
R0209
2.2K +/-5% 1/16W
R0214
2.2K +/-5% 1/16W
[8] I2C_SDA
[8] I2C_SCL
PCIe
PCIE1_REFCLK_M
PCIE1_REFCLK_P
PCIE1_RX0_M
PCIE1_RX0_P
PCIE1_RX1_M
PCIE1_RX1_P
PCIE1_TX0_M
PCIE1_TX0_P
PCIE1_TX1_M
PCIE1_TX1_P
PCIE1_RST_N
PCIE1_CLKREQ_N
PCIE1_WAKE_N
[9] 85OHM_PCIE1_REFCLK_M
[9] 85OHM_PCIE1_REFCLK_P
[9] 85OHM_PCIE1_RX0_M
[9] 85OHM_PCIE1_RX0_P
[9] 85OHM_PCIE1_TX0_M
[9] 85OHM_PCIE1_TX0_P
C0208
C0210
100nF +/-10% 10V
100nF +/-10% 10V
85OHM_PCIE0_TX0_M_0
85OHM_PCIE0_TX0_P_0
[9] PCIE1_RST_N
[9] PCIE1_CLK_REQ_N
[9] PCIE1_WAKE_N
RESERVED
RESERVED9
RESERVED10
RESERVED11
RESERVED12
RESERVED13
RESERVED14
RESERVED15
VREG_SYS_1P8 [23]
PM_FAULT_N [23]
50OHM_SPMI_CLK [23]
50OHM_SPMI_DATA [23]
SG555D_SG565D
U0301B
RESERVED
RESERVED16
RESERVED17
RESERVED18
RESERVED19
GPIO_116
[13] ETH_3V3_EN_0
RESERVED
GPIO_112
RESERVED20
RESERVED21
RESERVED22
RESERVED23
[2,16] FANFAN_TACH
R0203
0R +/-5% 1/16W
FLASH_LED
FLASH_LED1
RESERVED24
RESERVED25
RGB
RGB_BLU
RGB_GRN
RGB_RED
[2] RGB_B
[2] RGB_G
[2] RGB_R
RESERVED
RESERVED26
Keypad
VOL_UP
VOL_DOWN
PWRKEY
RESERVED27
[16] VOL_UP
[16] VOL_DOWN
[2,16,23] PWRKEY
[22] CBL_PWR_N
UART
DBG_TXD
DBG_RXD
UART_RXD
UART_TXD
UART_RTS
UART_CTS
GPIO_165
GPIO_166
[16] DBG_TXD
[16] DBG_RXD
TP_1_00mm
TP0203
TP_1_00mm
TP0204
TP_1_00mm
TP0201
D0201
WE05DF-BH
D0202
WE05DF-BH
0R +/-5% 1/16W
R0227
DBG_TXD_R
0R +/-5% 1/16W
R0228
DBG_RXD_R
0R +/-5% 1/16W
R0225
UART_RXD_R
0R +/-5% 1/16W
R0226
UART_TXD_R
[2,8] UART_RXD
[2,8] UART_TXD
[3,8] UART_RTS
[3,8] UART_CTS
[21] GPIO165
[21] GPIO166
SPI
SPI_CLK
SPI_CS
SPI_MISO
SPI_MOSI
[8] SPI_CLK
[8] SPI_CS0
[3,8] SPI_MISO
[3,8] SPI_MOSI
I2C
I2C_SDA
I2C_SCL
[19] HDMI_I2C_SDA
[19] HDMI_I2C_SCL
R0208
0R +/-5% 1/16W
R0202
0R +/-5% 1/16W
[8] SC_I2C_SDA
[8] SC_I2C_SCL
R0218
NM-0R +/-5% 1/16W
R0219
NM-0R +/-5% 1/16W
R0212
2.2K +/-5% 1/16W
R0213
2.2K +/-5% 1/16W
[2,3,6,8,9,10,12,13,14,16,21] LDO18B_1V8
LPI_MI2S
CODEC_RST_N
LPI_MI2S_SCLK
LPI_MI2S_WS
LPI_MI2S_DATA0
LPI_MI2S_DATA1
LPI_MI2S_DATA2
LPI_MI2S_DATA3
WCD9370_RST_N [6]
50OHM_SWR_TX_CLK [6]
50OHM_SWR_TX_DATA0 [6]
50OHM_SWR_TX_DATA1 [6]
50OHM_SWR_RX_CLK [6]
50OHM_SWR_RX_DATA0 [6]
50OHM_SWR_RX_DATA1 [6]
LPI_DMIC
LPI_DMIC1_CLK
LPI_DMIC1_DATA
LPI_DMIC2_CLK
LPI_DMIC2_DATA
LPI_DMIC3_CLK
LPI_DMIC3_DATA
LPI_DMIC1_CLK [7]
LPI_DMIC1_DATA [7]
NM-100nF +/-10% 10V
C0214
C0215
MI2S
MI2S_MCLK
MI2S_SCLK
MI2S_WS
MI2S_DATA0
MI2S_DATA1
R0229 0R +/-5% 1/16W
R0230 0R +/-5% 1/16W
SG565_MI2S_MCLK [19]
SG565_MI2S_SCLK [19]
SG565_MI2S_WS [19]
SG565_MI2S_DATA0 [19]
Sensor INT
ACCEL_INT
GYRO_INT
MAG_INT
ALPS_INT
HALL_INT
MI2S2_WS [8]
MI2S2_DATA0 [8]
MI2S2_DATA1 [8]
GPIO142 [7]
MI2S2_SCLK [8]
R0231 0R +/-5% 1/16W
C0213
NM-100nF +/-10% 10V
ADC
ADC0
ADC1
ADC2
ADC3
ADC4
ADC5
ADC0 [16]
ADC1 [16]
ADC2 [16]
C0216
C0217
C0218
NM-100nF +/-10% 10V
PWM
PWM2
PWM1
PWM2 [8]
R0205
NM-0R +/-5% 1/16W
FANFAN_TACH [2,16]
USB_BOOT
USB_BOOT
RESERVED28
R0224
NM-0R Jumper <=0.05ohm 1A
FORCE_USB_BOOT [23]
USB_BOOT [16]
Sensor_I2C
LPI_SENSOR_I2C1_SDA
LPI_SENSOR_I2C1_SCL
LPI_SENSOR_I2C2_SDA
LPI_SENSOR_I2C2_SCL
RESERVED29
RESERVED30
SG555D_SG565D
J0201
C2542VD10210G0101PK
J0202
PH254002J-21400
VBAT_MODULE_IN
VBAT_MODULE_EN
R0222
100K +/-5% 1/16W
[2,16,23] PWRKEY
C0219
4.7uF +/-20% 6.3V
C0220
2.2uF +/-10% 6.3V
Q0201
DTC043ZEBTL
R0234 NM-NM
Q0202
DTC043ZEBTL
R0220
100K +/-1% 1/16W
VBAT_MODULE_EN
U0201
SGM894B-2.9XC4G/TR
VIN
VOUT
CD
GND
VOUT_VBAT
R0223
0R +/-5% 1/16W
R0221
NM-10K +/-5% 1/16W
C0201
2.2uF +/-10% 6.3V
C0212
NM-100nF +/-10% 10V
TP_1_00mm
TP0209
TP_1_00mm
TP0210
UART_TXD [2,8]
UART_RXD [2,8]
D0203
WE05DF-BH
D0204
WE05DF-BH
TP_1_00mm
TP0207
TP_1_00mm
TP0208
PCB0201
[2] RGB_B
[2] RGB_R
[2] RGB_G
R0210
0R +/-5% 1/16W
R0211
0R +/-5% 1/16W
R0201
0R +/-5% 1/16W
D0205
D0206
D0207
A-SP194B1C-C01-4T
A-SP194R6C-C02-4T
A-SP194G2C-C01-4T
H0201
H0202
npth_cir3_00
H0206
H0207
H0208
H0209
H0210
H0211
PTH_cir2_70_6_00
Organization
Quectel Wireless Solutions
Project
Quectel Pi H1
Ver
V1.3
Drawn By
Weida LIU/Elliot LI
Checked By
Zac WANG
Size
A2
Date:
Friday, November 28, 2025
Sheet
2
of
25

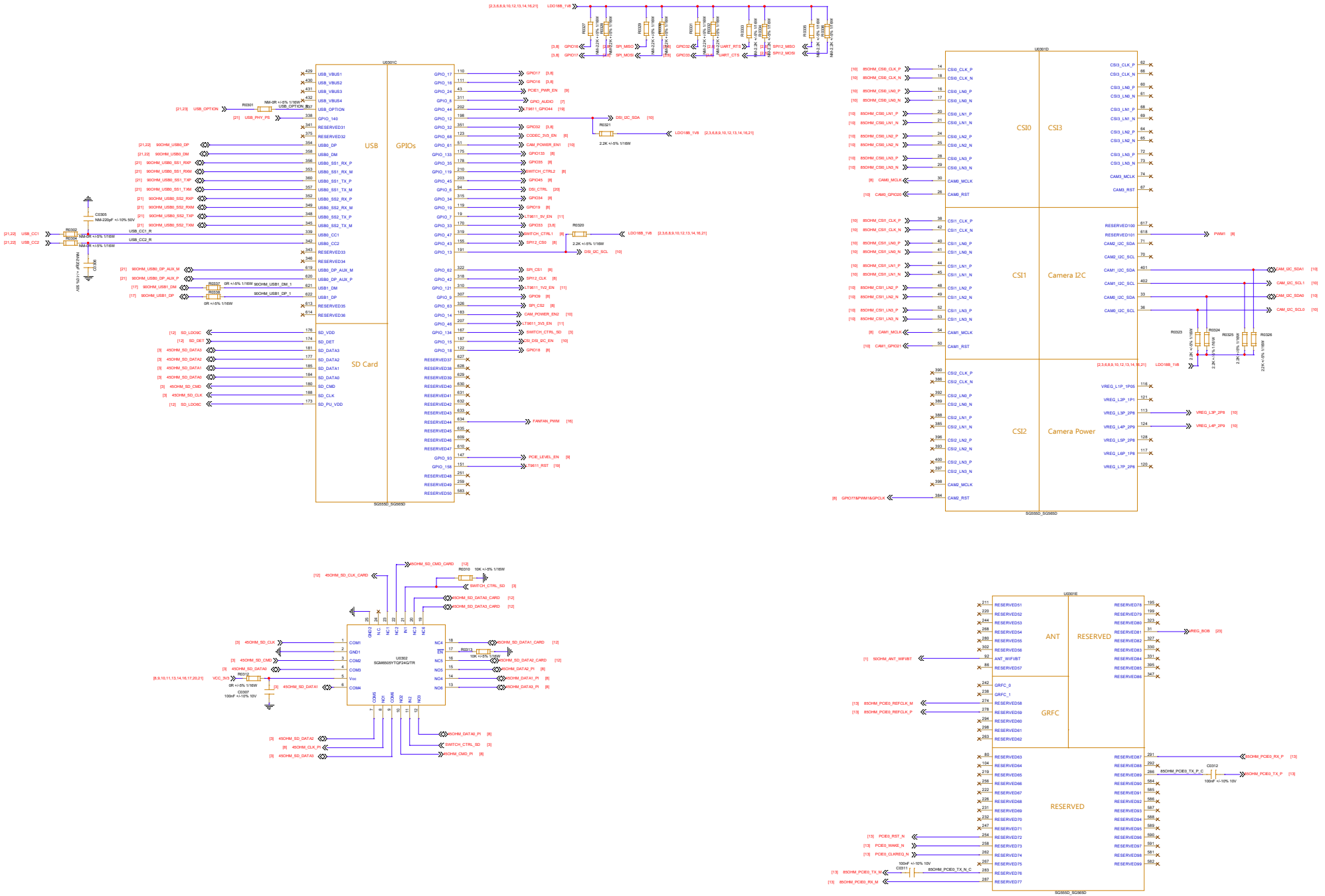
U0301C
USB
GPIOs
SD Card
SG5550D_SG565D
U0301D
CSI0
CSI3
CSI1
Camera I2C
CSI2
Camera Power
U0302
SGM6505YTGF24GTR
U0301E
ANT
RESERVED
GRFC
RESERVED
SG565D_SG565D
Organization
Quectel Wireless Solutions
Project
Quectel Pi H1
Ver
V1.3
Drawn By
Weida LIU/Elliot LI
Checked By
Zac WANG
Size
A4
Date
Friday, December 26, 2025
Sheet
3
of
25

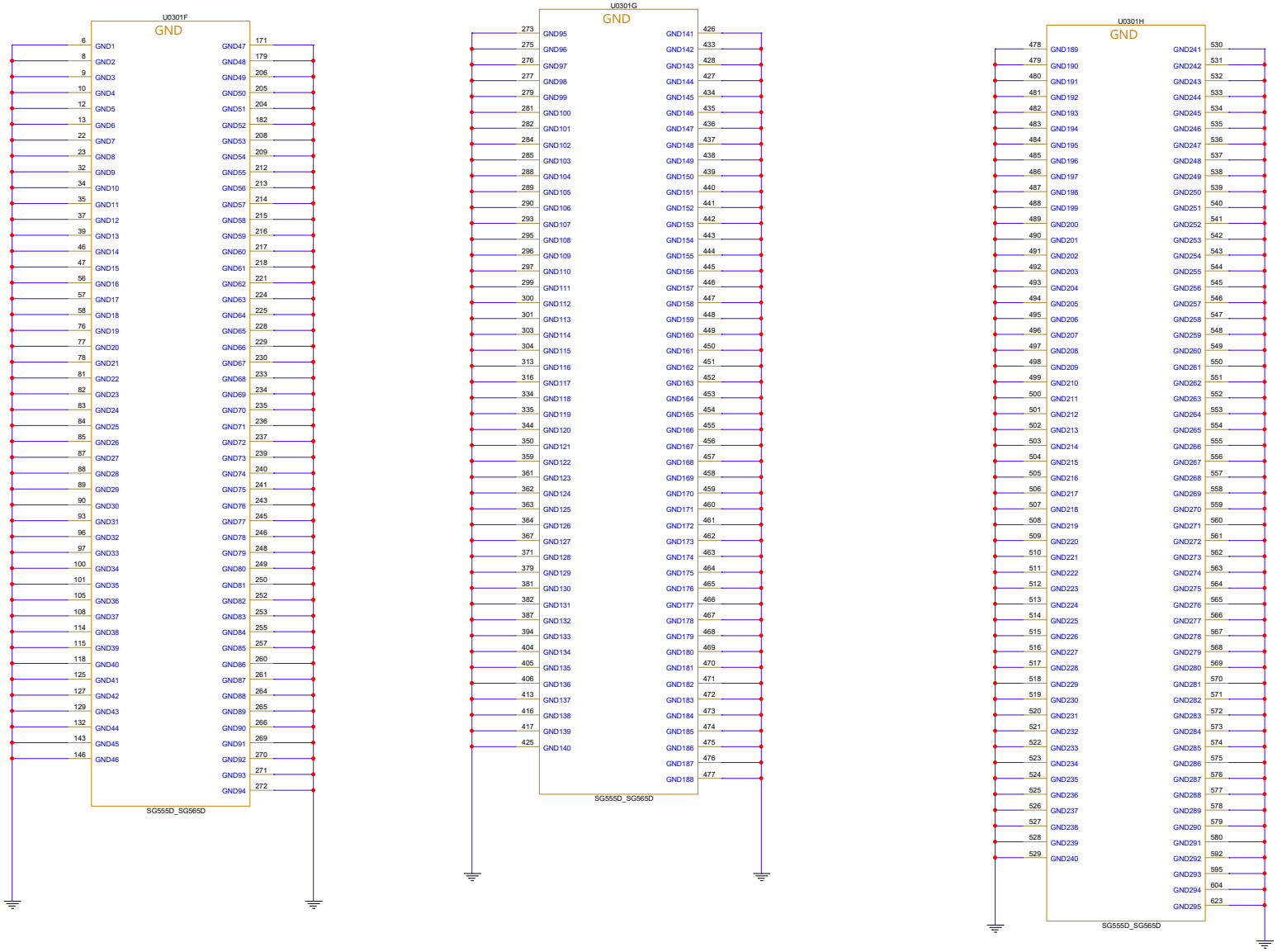

Organization	Quectel Wireless Solutions		
Project	Quectel Pi H1	Ver	V1.3
Drawn By	Weida LIU/Elliot LI	Checked By	Zac WANG
Size	A2		
Date:	Friday, November 28, 2025	Sheet	4 of 25

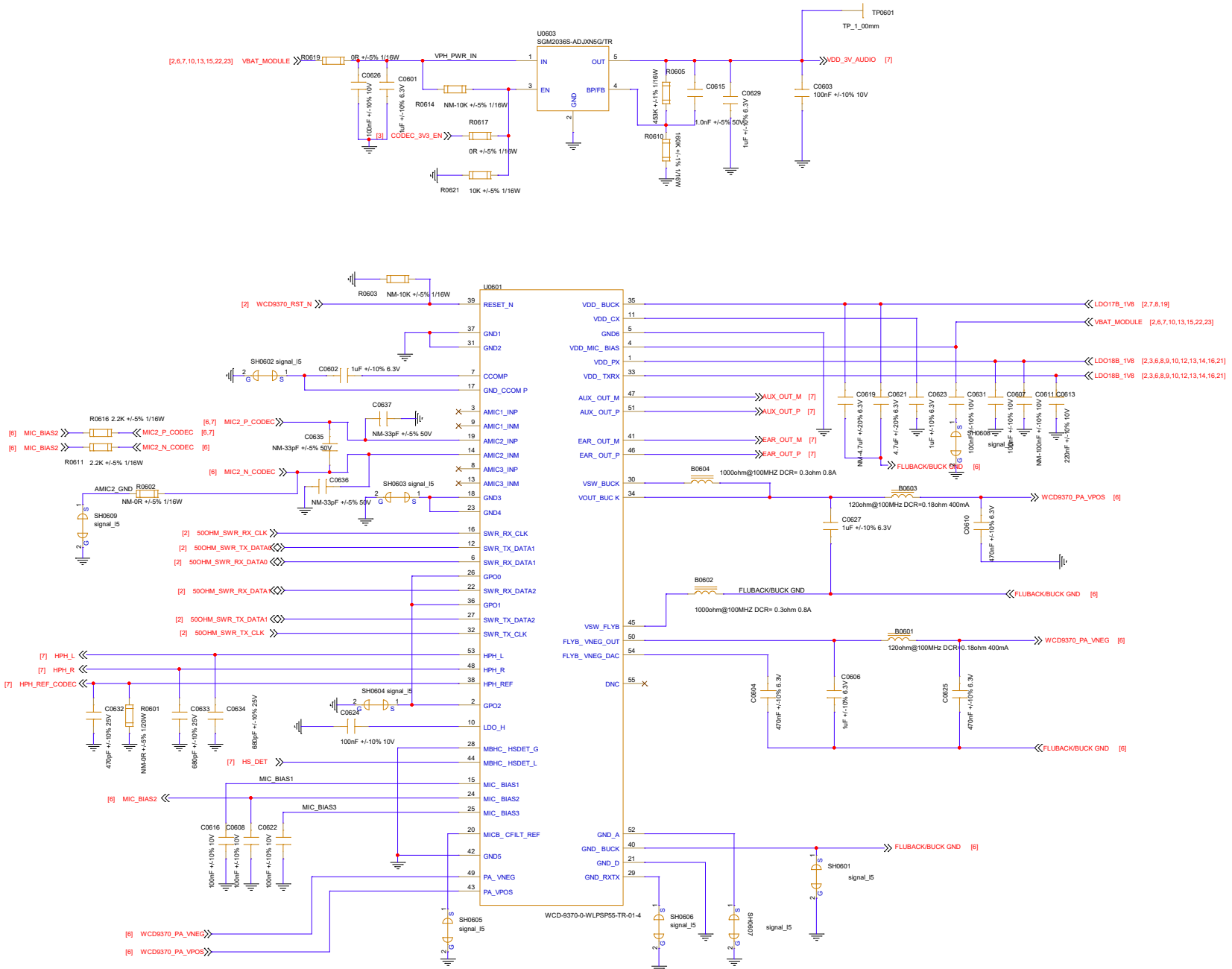

Organization: Quectel Wireless Solutions			
Project: Quectel Pi H1		Ver: V1.3	
Drawn By: Weida LIU/Elliot LI	Checked By: Zac WANG		Size: A2
Date: Friday, November 28, 2025	Sheet 5 of 25		

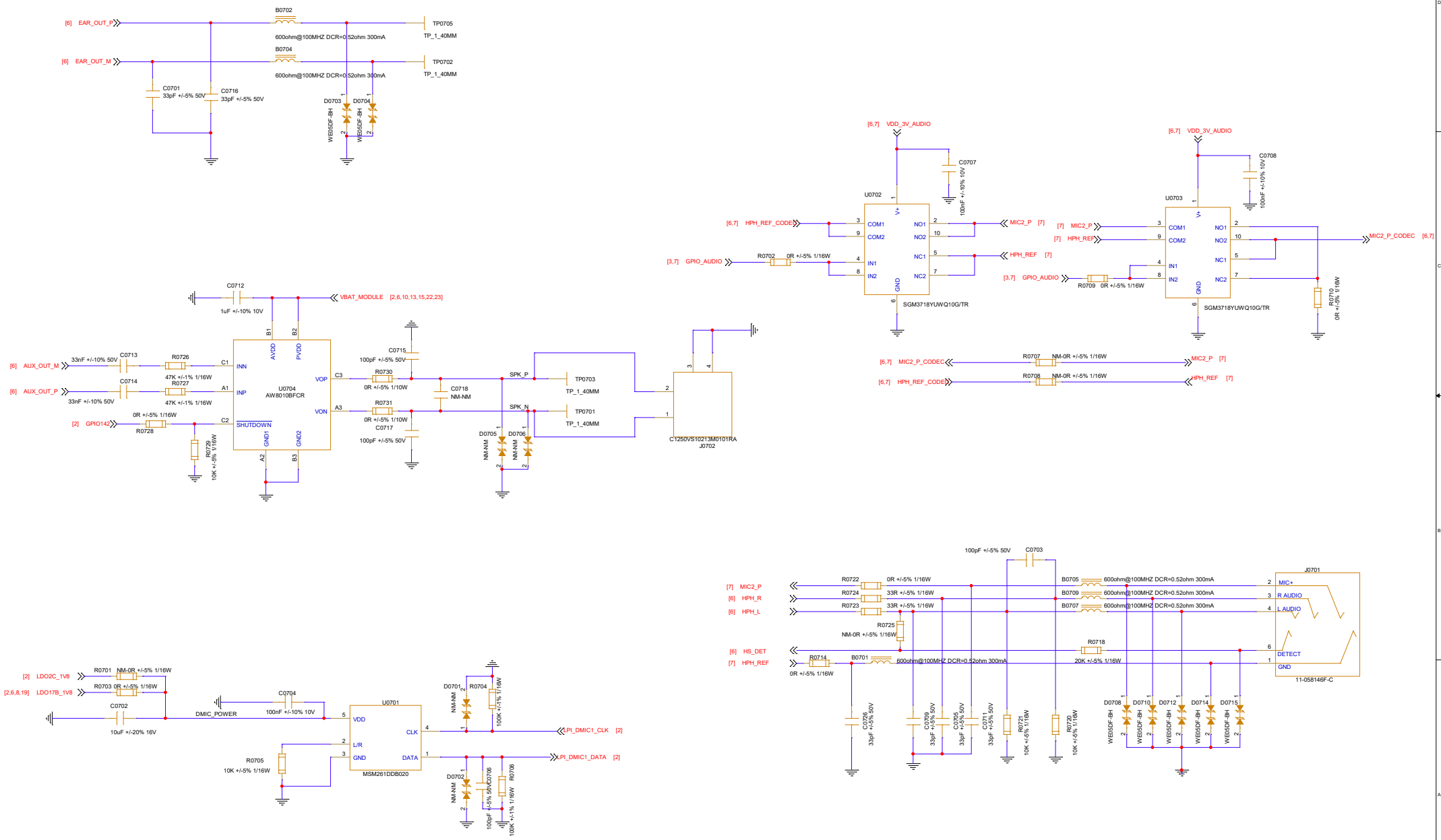

Quectel Wireless Solutions		
PROJECT: Quectel Pi H1		VER: V1.3
DRAWN BY: Weida LIU/Eliot LI	CHECKED BY: Zac WANG	SIZE: A2
DATE: Friday, November 28, 2025	SHEET: 6 OF 25	

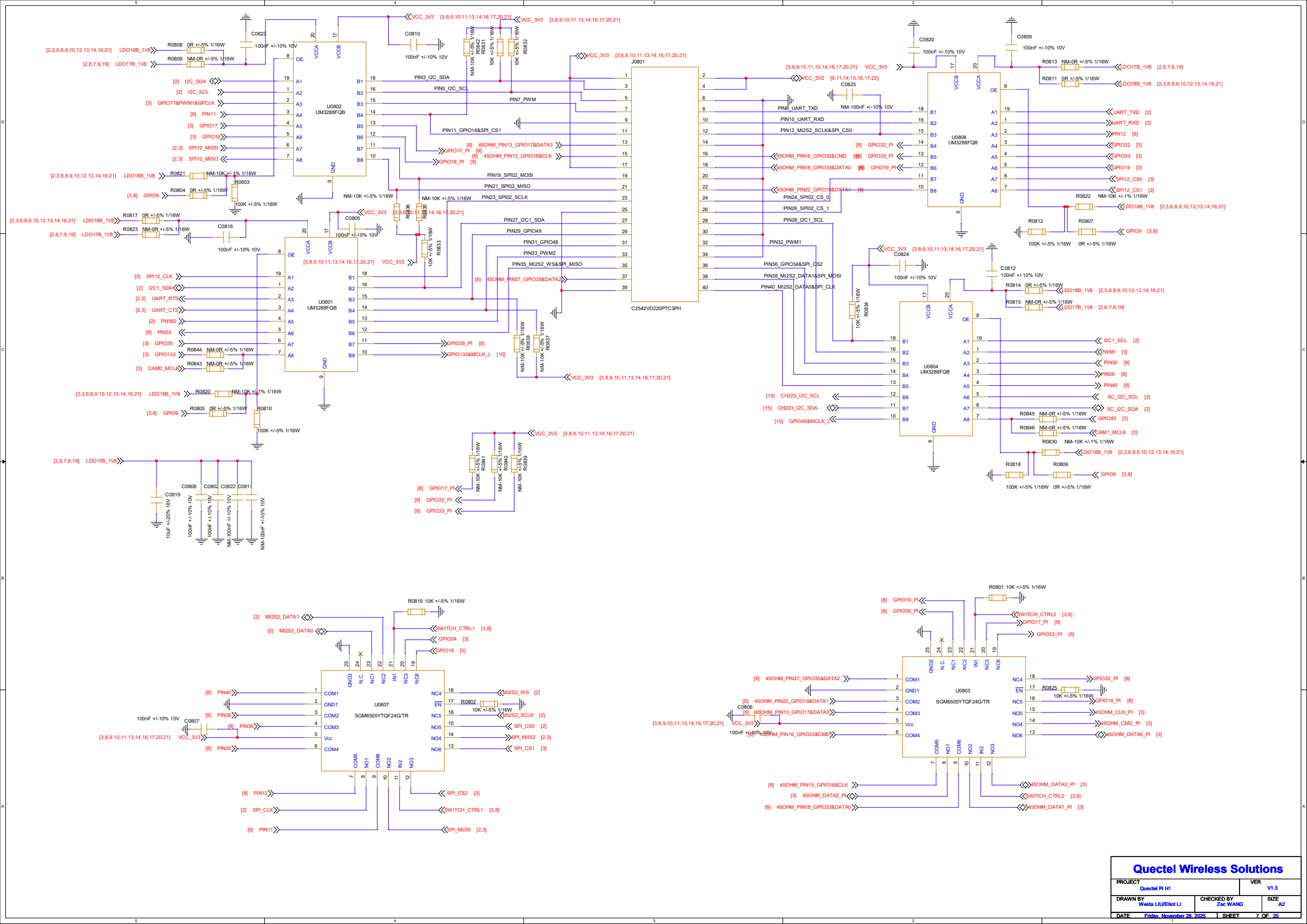
U0802
UM3288FQB
U0801
UM3288FQB
J0801
C2542VD220PTC3PH
U0808
UM3288FQB
U0804
UM3288FQB
U0807
SGM6505YTQF24G/TR
U0803
SGM6505YTQF24G/TR
Quectel Wireless Solutions
PROJECT
Quectel Pi H1
VER
V1.3
DRAWN BY
Weida LIU/Eliot LI
CHECKED BY
Zac WANG
SIZE
A2
DATE
Friday, November 28, 2025
SHEET
7 OF 25

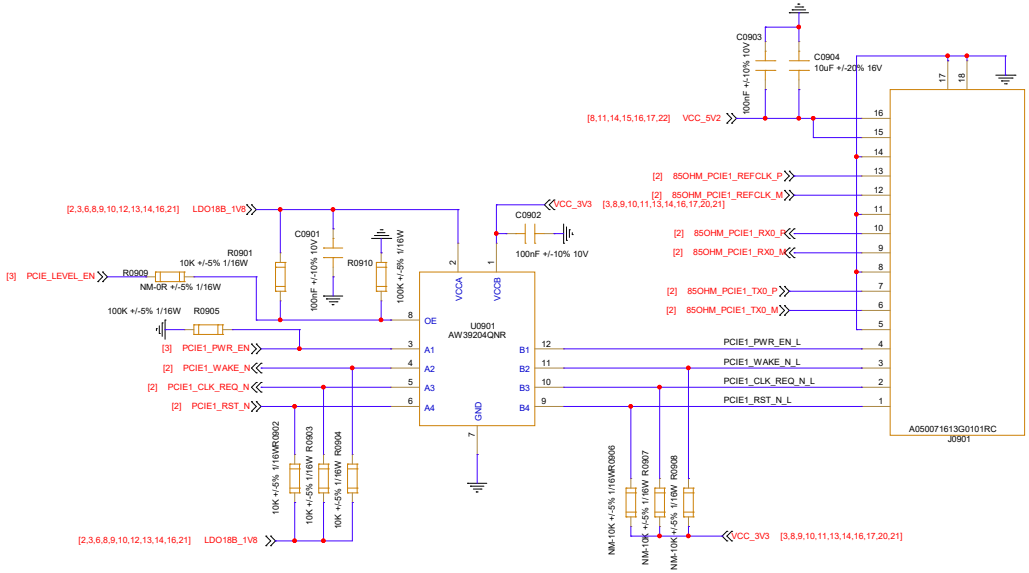

Quectel Wireless Solutions

PROJECT: Quectel Pi H1		VER: V1.3
DRAWN BY: Weida LIU/Eliot LI	CHECKED BY: Zac WANG	SIZE: A2
DATE: Friday, November 28, 2025	SHEET: 8 OF 25	

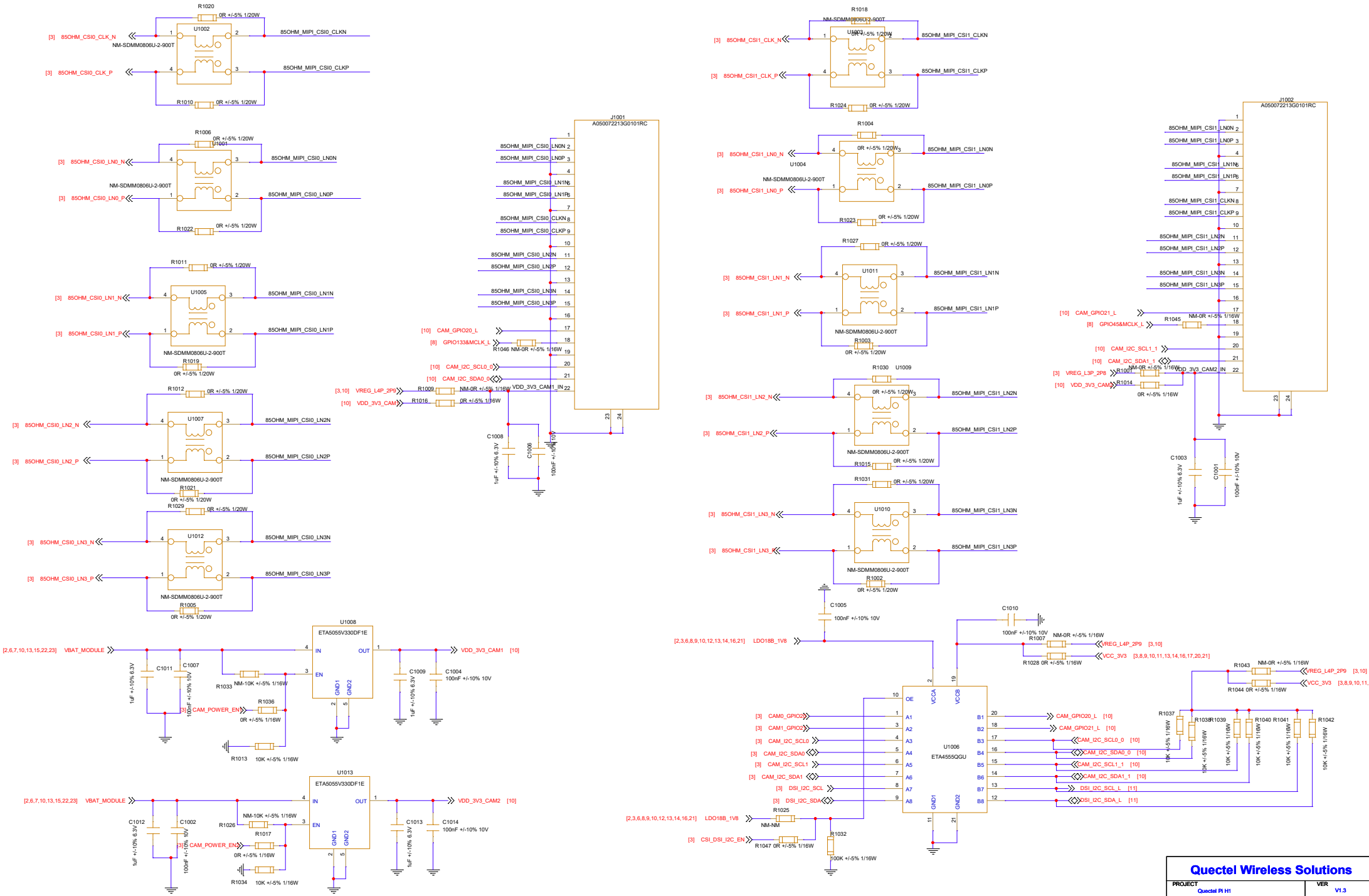
R1020
0R +/-5% 1/20W
U1002
NM-SDMM0806U-2-900T
[3] 85OHM_CSI0_CLK_N
[3] 85OHM_CSI0_CLK_P
85OHM_MIPI_CSI0_CLKN
85OHM_MIPI_CSI0_CLKP
R1010
R1006
U1001
[3] 85OHM_CSI0_LN0_N
[3] 85OHM_CSI0_LN0_P
85OHM_MIPI_CSI0_LN0N
85OHM_MIPI_CSI0_LN0P
R1022
R1011
U1005
[3] 85OHM_CSI0_LN1_N
[3] 85OHM_CSI0_LN1_P
85OHM_MIPI_CSI0_LN1N
85OHM_MIPI_CSI0_LN1P
R1019
R1012
U1007
[3] 85OHM_CSI0_LN2_N
[3] 85OHM_CSI0_LN2_P
85OHM_MIPI_CSI0_LN2N
85OHM_MIPI_CSI0_LN2P
R1021
R1029
U1012
[3] 85OHM_CSI0_LN3_N
[3] 85OHM_CSI0_LN3_P
85OHM_MIPI_CSI0_LN3N
85OHM_MIPI_CSI0_LN3P
R1005
J1001
A050072213G0101RC
[10] CAM_GPIO20_L
[8] GPIO133&MCLK_L
R1046 NM-0R +/-5% 1/16W
[10] CAM_I2C_SCL0_0
[10] CAM_I2C_SDA0_0
[3,10] VREG_L4P_2P9
[10] VDD_3V3_CAM1
R1009 NM-0R +/-5% 1/16W
R1016 0R +/-5% 1/16W
VDD_3V3_CAM1_IN
C1008
1uF +/-10% 6.3V
C1006
100nF +/-10% 10V
R1018
NM-SDMM0806U-2-900T
U1003
[3] 85OHM_CSI1_CLK_N
[3] 85OHM_CSI1_CLK_P
85OHM_MIPI_CSI1_CLKN
85OHM_MIPI_CSI1_CLKP
R1024
R1004
U1004
[3] 85OHM_CSI1_LN0_N
[3] 85OHM_CSI1_LN0_P
85OHM_MIPI_CSI1_LN0N
85OHM_MIPI_CSI1_LN0P
R1023
R1027
U1011
[3] 85OHM_CSI1_LN1_N
[3] 85OHM_CSI1_LN1_P
85OHM_MIPI_CSI1_LN1N
85OHM_MIPI_CSI1_LN1P
R1003
R1030
U1009
[3] 85OHM_CSI1_LN2_N
[3] 85OHM_CSI1_LN2_P
85OHM_MIPI_CSI1_LN2N
85OHM_MIPI_CSI1_LN2P
R1015
R1031
U1010
[3] 85OHM_CSI1_LN3_N
[3] 85OHM_CSI1_LN3_P
85OHM_MIPI_CSI1_LN3N
85OHM_MIPI_CSI1_LN3P
R1002
C1005
100nF +/-10% 10V
[2,3,6,8,9,10,12,13,14,16,21] LDO18B_1V8
J1002
A050072213G0101RC
[10] CAM_GPIO21_L
[8] GPIO45&MCLK_L
R1045 NM-0R +/-5% 1/16W
[10] CAM_I2C_SCL1_1
[10] CAM_I2C_SDA1_1
[3] VREG_L3P_2P8
[10] VDD_3V3_CAM2
R1007 NM-0R +/-5% 1/16W
R1014 0R +/-5% 1/16W
VDD_3V3_CAM2_IN
C1003
1uF +/-10% 6.3V
C1001
100nF +/-10% 10V
C1010
100nF +/-10% 10V
R1007 NM-0R +/-5% 1/16W
R1028 0R +/-5% 1/16W
[3,8,9,10,11,13,14,16,17,20,21]
VREG_L4P_2P9 [3,10]
VCC_3V3
R1043 NM-0R +/-5% 1/16W
R1044 0R +/-5% 1/16W
U1008
ETA5055V330DF1E
[2,6,7,10,13,15,22,23] VBAT_MODULE
IN
OUT
EN
GND1
GND2
VDD_3V3_CAM1 [10]
C1011
1uF +/-10% 6.3V
C1007
100nF +/-10% 10V
R1033 NM-10K +/-5% 1/16W
[3] CAM_POWER_EN
R1036 0R +/-5% 1/16W
R1013 10K +/-5% 1/16W
C1009
1uF +/-10% 6.3V
C1004
100nF +/-10% 10V
U1013
ETA5055V330DF1E
VDD_3V3_CAM2 [10]
C1012
1uF +/-10% 6.3V
C1002
100nF +/-10% 10V
R1026 NM-10K +/-5% 1/16W
R1017 0R +/-5% 1/16W
R1034 10K +/-5% 1/16W
C1013
1uF +/-10% 6.3V
C1014
100nF +/-10% 10V
U1006
ETA4555QGU
OE
VCCA
VCCB
A1
A2
A3
A4
A5
A6
A7
A8
B1
B2
B3
B4
B5
B6
B7
B8
[3] CAM0_GPIO2
[3] CAM1_GPIO2
[3] CAM_I2C_SCL0
[3] CAM_I2C_SDA0
[3] CAM_I2C_SCL1
[3] CAM_I2C_SDA1
[3] DSI_I2C_SCL
[3] DSI_I2C_SDA
CAM_GPIO20_L [10]
CAM_GPIO21_L [10]
CAM_I2C_SCL0_0 [10]
CAM_I2C_SDA0_0 [10]
CAM_I2C_SCL1_1 [10]
CAM_I2C_SDA1_1 [10]
DSI_I2C_SCL_L [11]
DSI_I2C_SDA_L [11]
R1025 NM-NM
[2,3,6,8,9,10,12,13,14,16,21] LDO18B_1V8
[3] CSI_DSI_I2C_EN
R1047 0R +/-5% 1/16W
R1032 100K +/-5% 1/16W
R1037
R1038
R1039
R1040
R1041
R1042
10K +/-5% 1/16W
Quectel Wireless Solutions
PROJECT
Quectel Pi H1
VER
V1.3
DRAWN BY
Weida LIU/Eliot LI
CHECKED BY
Zac WANG
SIZE
A2
DATE
Friday, November 28, 2025
SHEET
9 OF 25

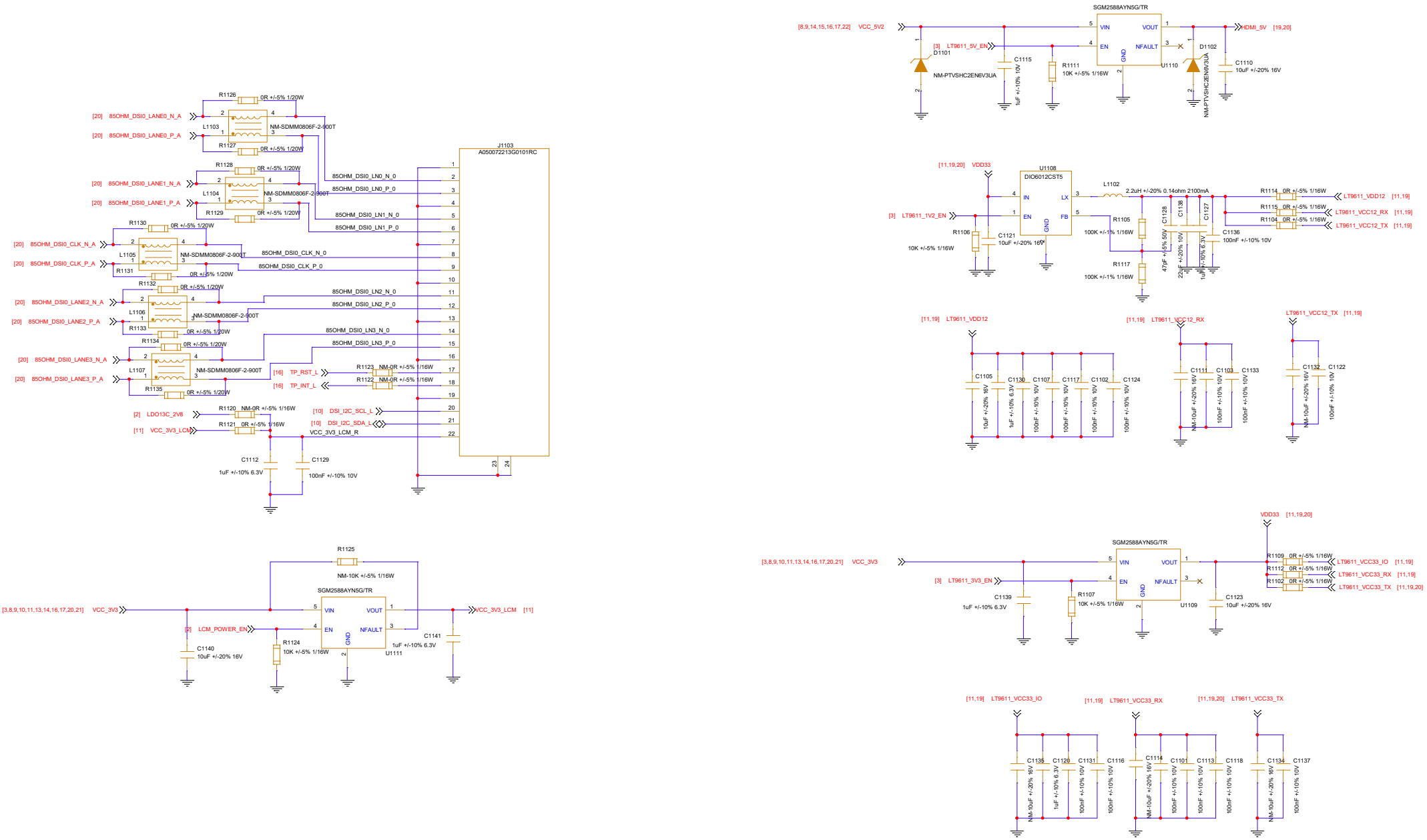

Quectel Wireless Solutions

PROJECT	VER
Quectel Pi H1	V1.3

DRAWN BY	CHECKED BY	SIZE
Weida LIU/Eliot LI	Zac WANG	A2

DATE	SHEET
Friday, November 28, 2025	10OF 25

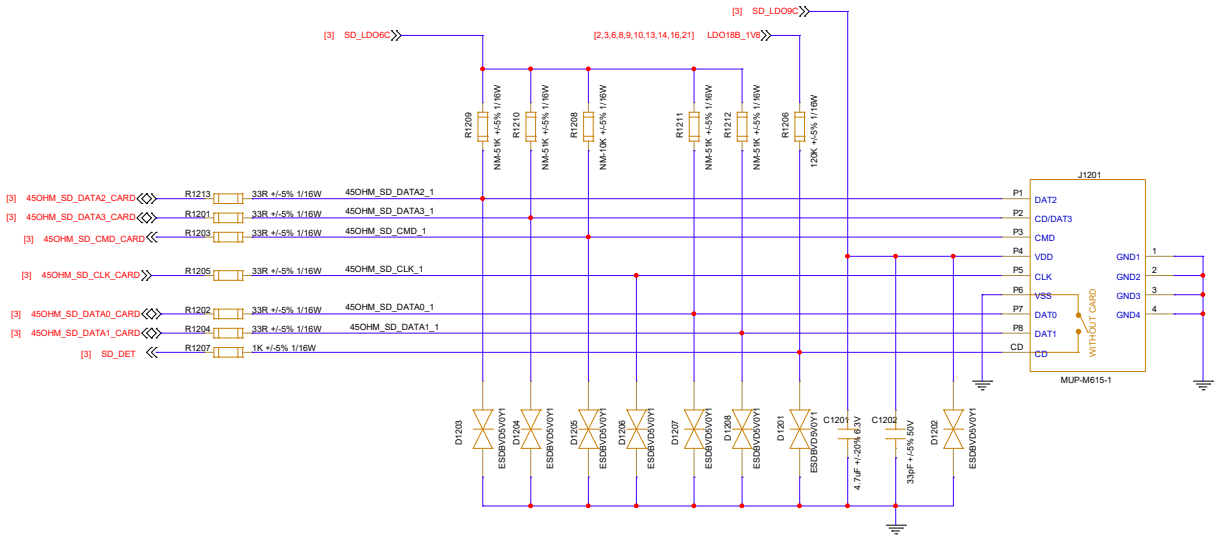

Quectel Wireless Solutions		
PROJECT: Quectel Pi H1		VER: V1.3
DRAWN BY: Weida LIU/Eliot LI	CHECKED BY: Zac WANG	SIZE: A2
DATE: Friday, November 28, 2025	SHEET: 11 OF 25	

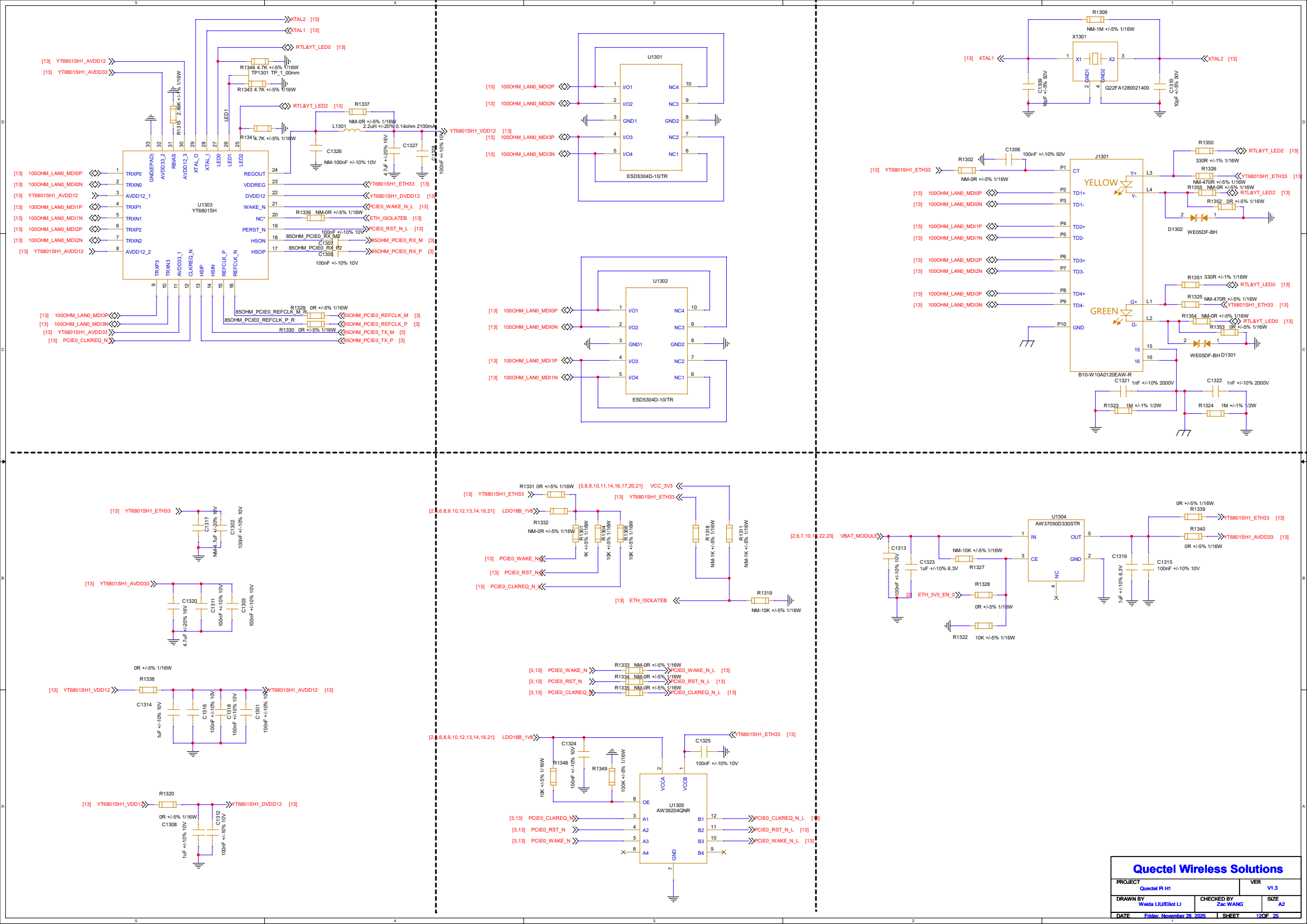
U1303
YT6801SH
U1301
ESD5304D-10/TR
U1302
ESD5304D-10/TR
X1301
Q22FA1280021400
J1301
B10-W10A0120EAW-R
YELLOW
GREEN
U1304
AW37050D330STR
U1305
AW39204QNR
Quectel Wireless Solutions
PROJECT
Quectel Pi H1
VER
V1.3
DRAWN BY
Weida LIU/Eliot LI
CHECKED BY
Zac WANG
SIZE
A2
DATE
Friday, November 28, 2025
SHEET
12 OF 25

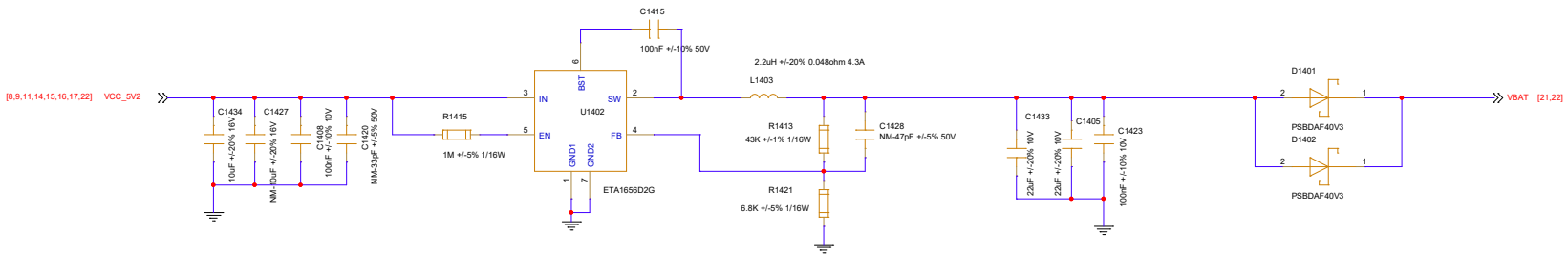

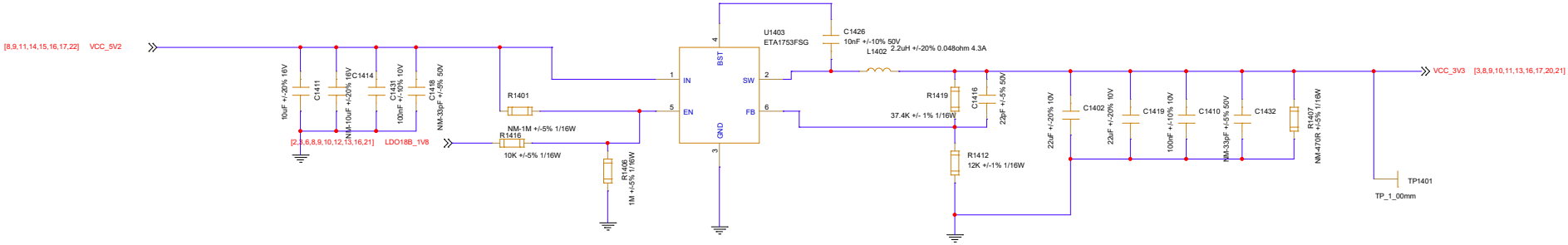

Quectel Wireless Solutions		
PROJECT: Quectel Pi H1		VER: V1.3
DRAWN BY: Weida LIU/Eliot LI	CHECKED BY: Zac WANG	SIZE: A2
DATE: Friday, November 28, 2025	SHEET: 13 OF 25	

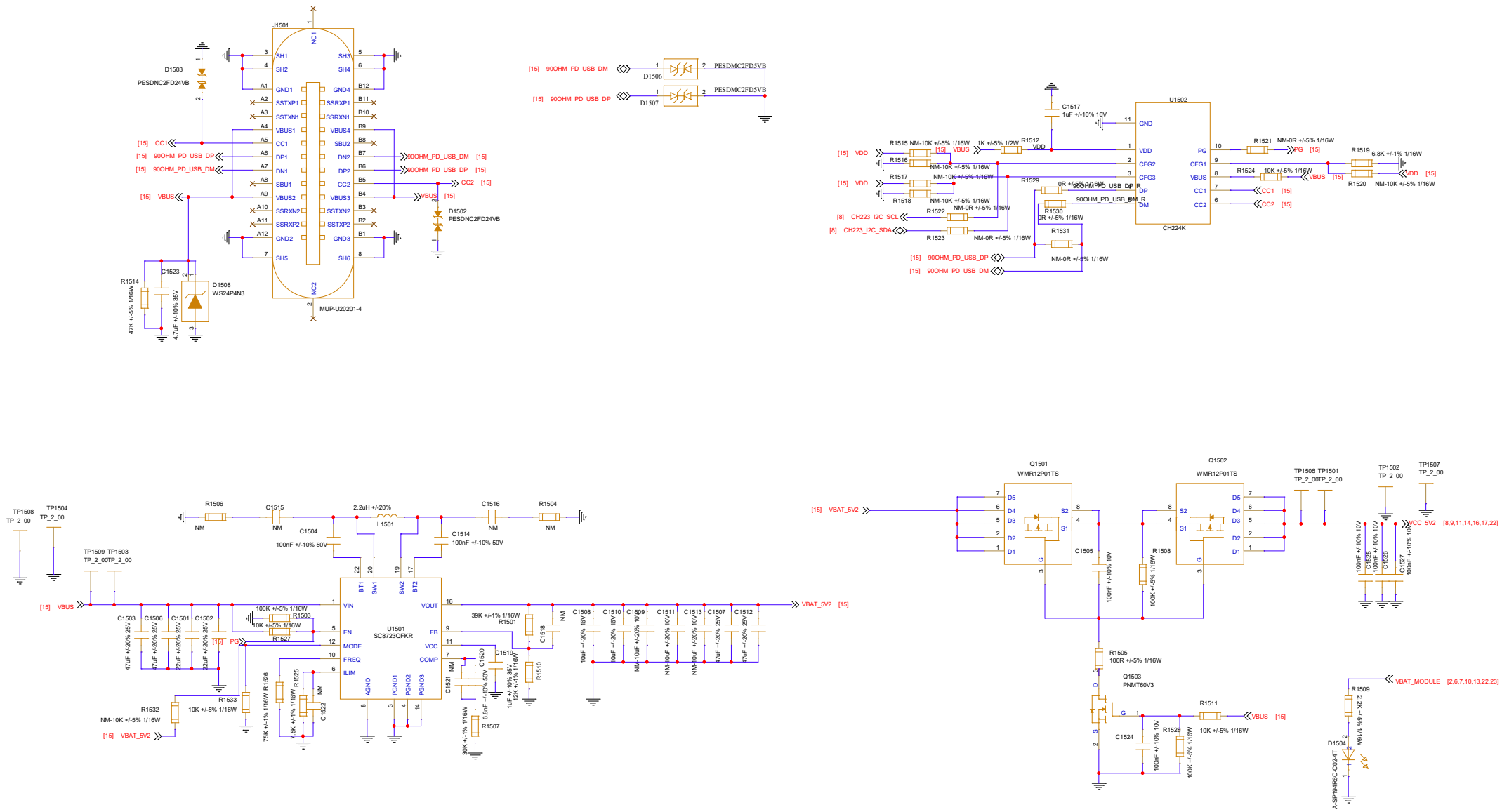

Quectel Wireless Solutions

PROJECT: Quectel Pi H1		VER: V1.3
DRAWN BY: Weida LIU/Eliot LI	CHECKED BY: Zac WANG	SIZE: A2
DATE: Friday, November 28, 2025	SHEET: 14 OF 25	

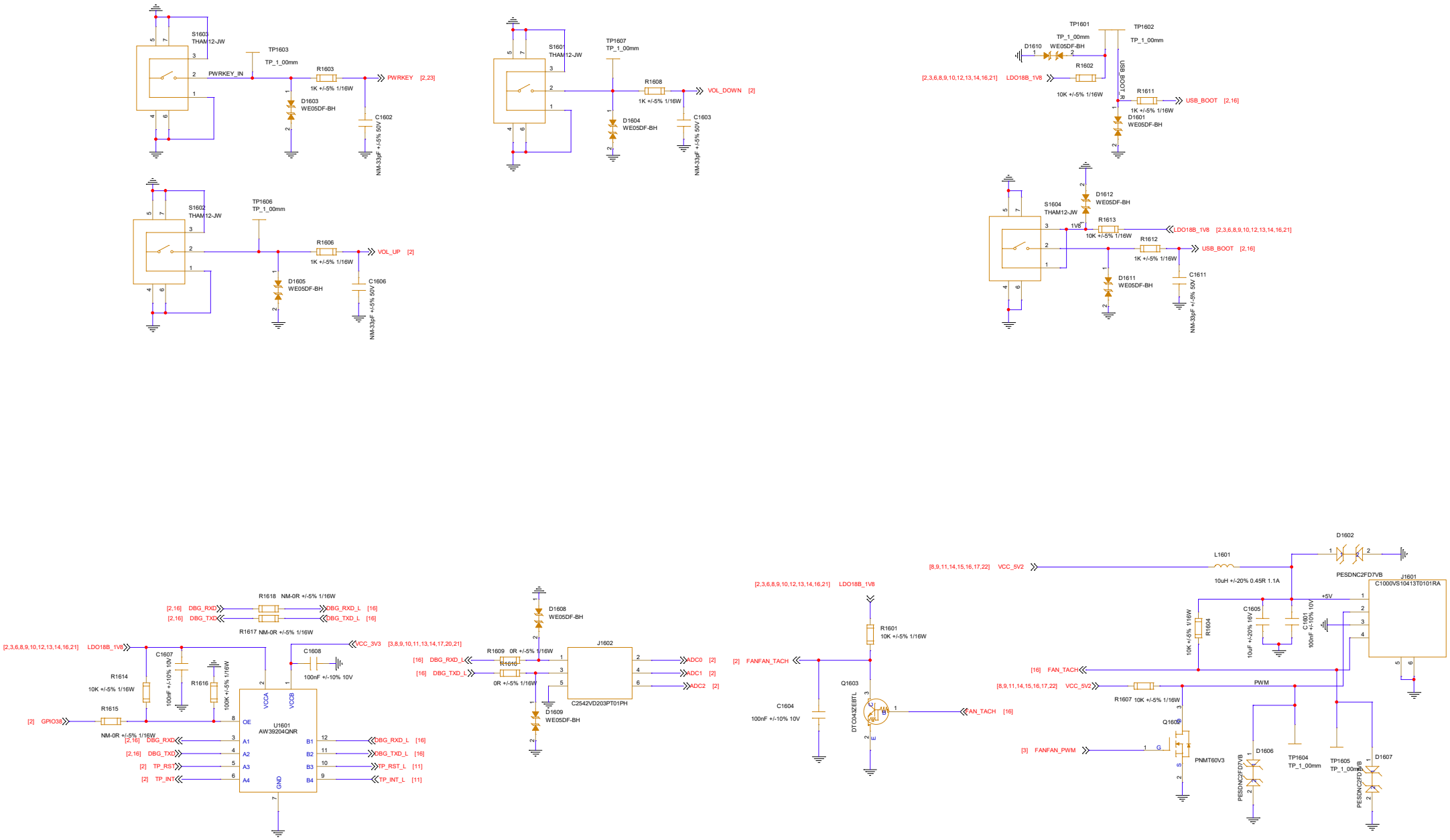

Quectel Wireless Solutions

PROJECT: Quectel Pi H1		VER: V1.3
DRAWN BY: Weida LIU/Eliot LI	CHECKED BY: Zac WANG	SIZE: A2
DATE: Friday, November 28, 2025	SHEET: 15 OF 25	

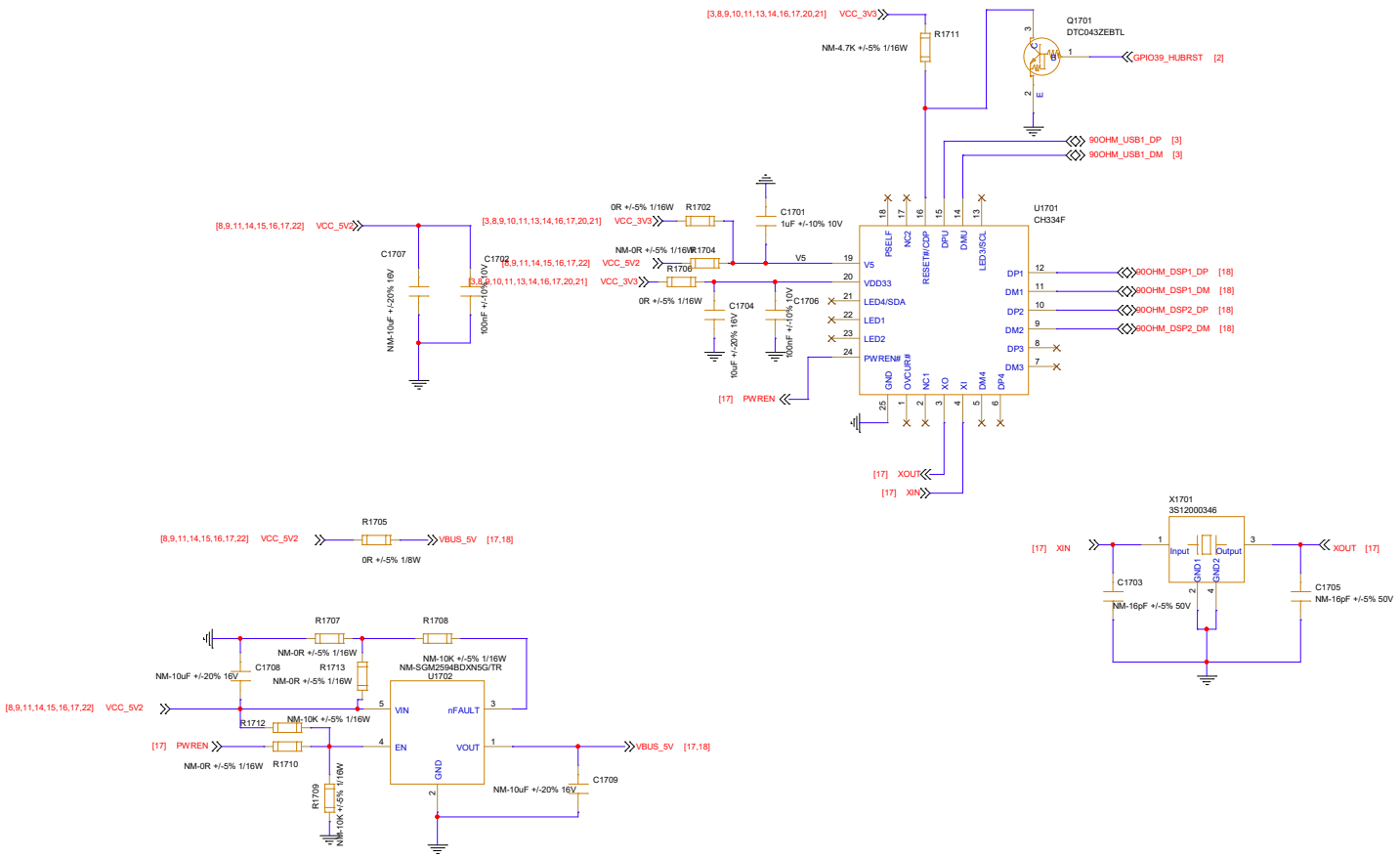

Quectel Wireless Solutions

PROJECT: Quectel Pi H1		VER: V1.3
DRAWN BY: Weida LIU/Eliot LI	CHECKED BY: Zac WANG	SIZE: A2
DATE: Friday, November 28, 2025	SHEET: 16 OF 25	

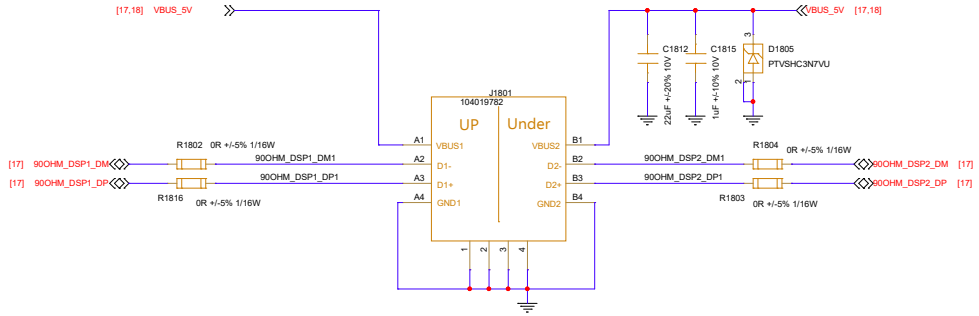

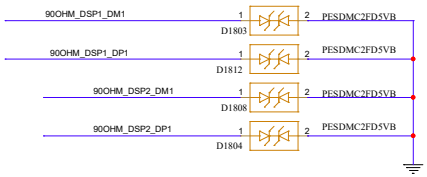

Quectel Wireless Solutions		
PROJECT: Quectel Pi H1		VER: V1.3
DRAWN BY: Weida LIU/Eliot LI	CHECKED BY: Zac WANG	SIZE: A2
DATE: Friday, November 28, 2025	SHEET: 17 OF 25	

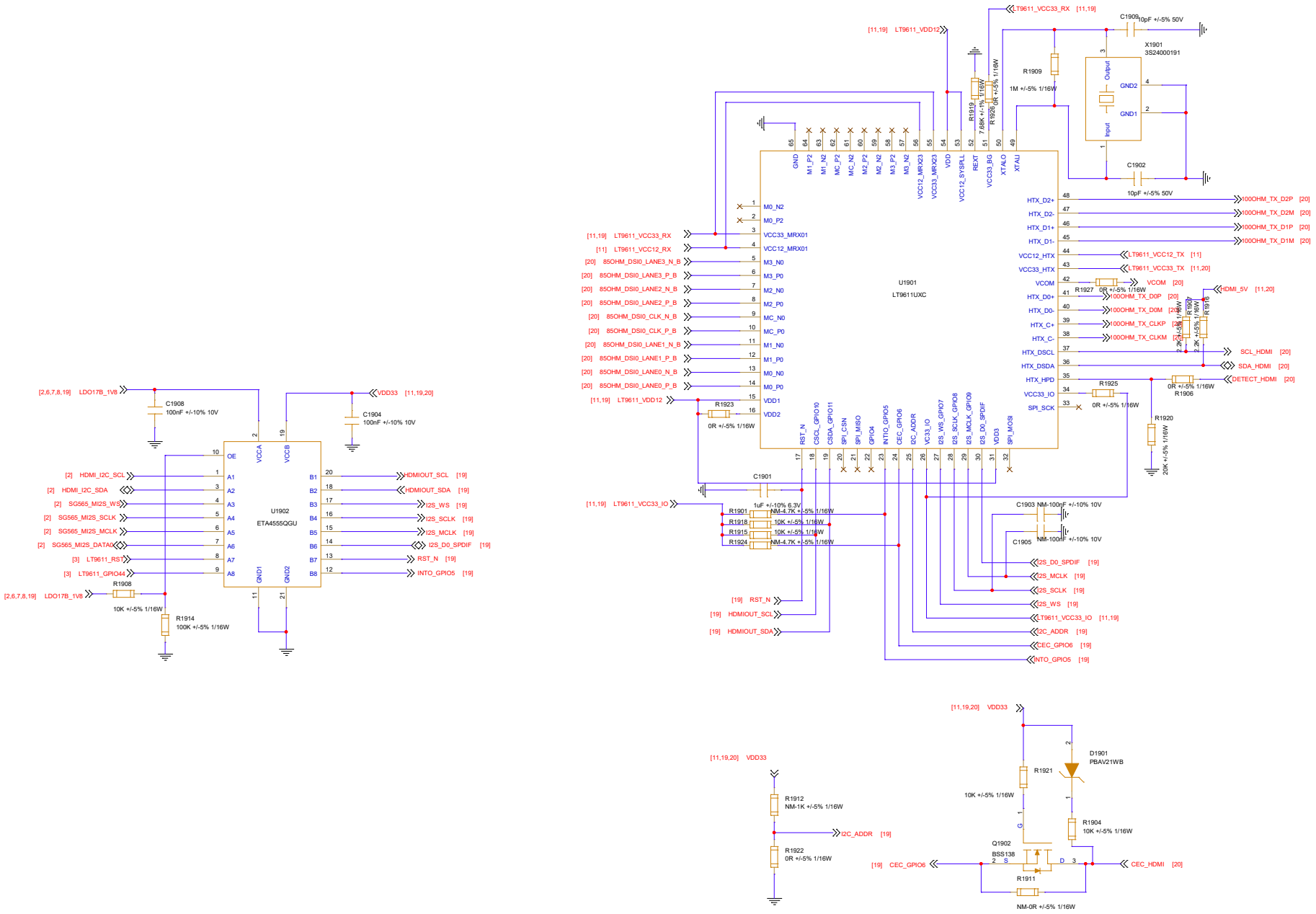

Quectel Wireless Solutions		
PROJECT: Quectel Pi H1		VER: V1.3
DRAWN BY: Weida LIU/Eliot LI	CHECKED BY: Zac WANG	SIZE: A2
DATE: Friday, November 28, 2025	SHEET: 18 OF 25	

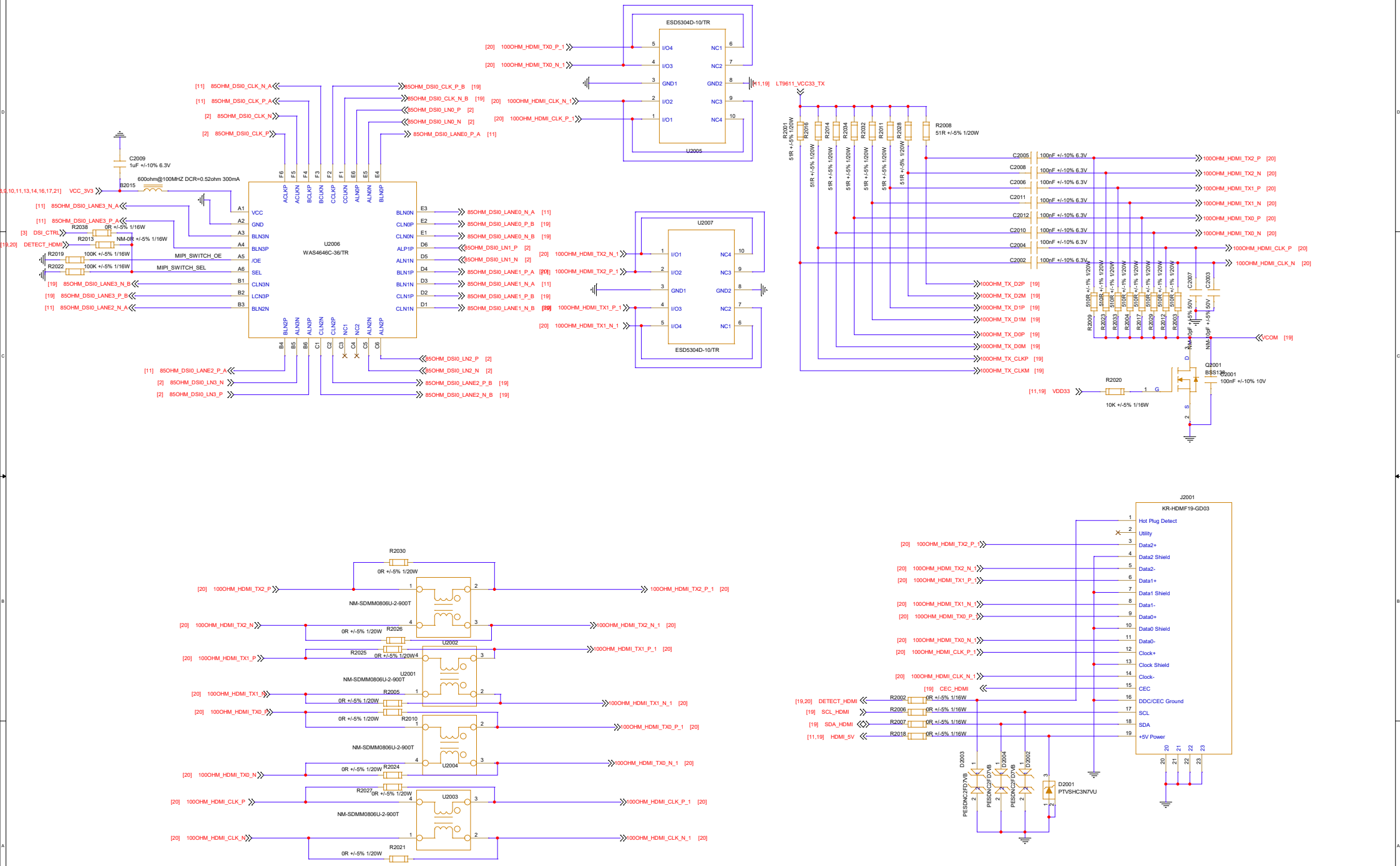

Quectel Wireless Solutions

PROJECT: Quectel Pi H1		VER: V1.3
DRAWN BY: Weida LIU/Eliot LI	CHECKED BY: Zac WANG	SIZE: A2
DATE: Friday, November 28, 2025	SHEET: 19 OF 25	

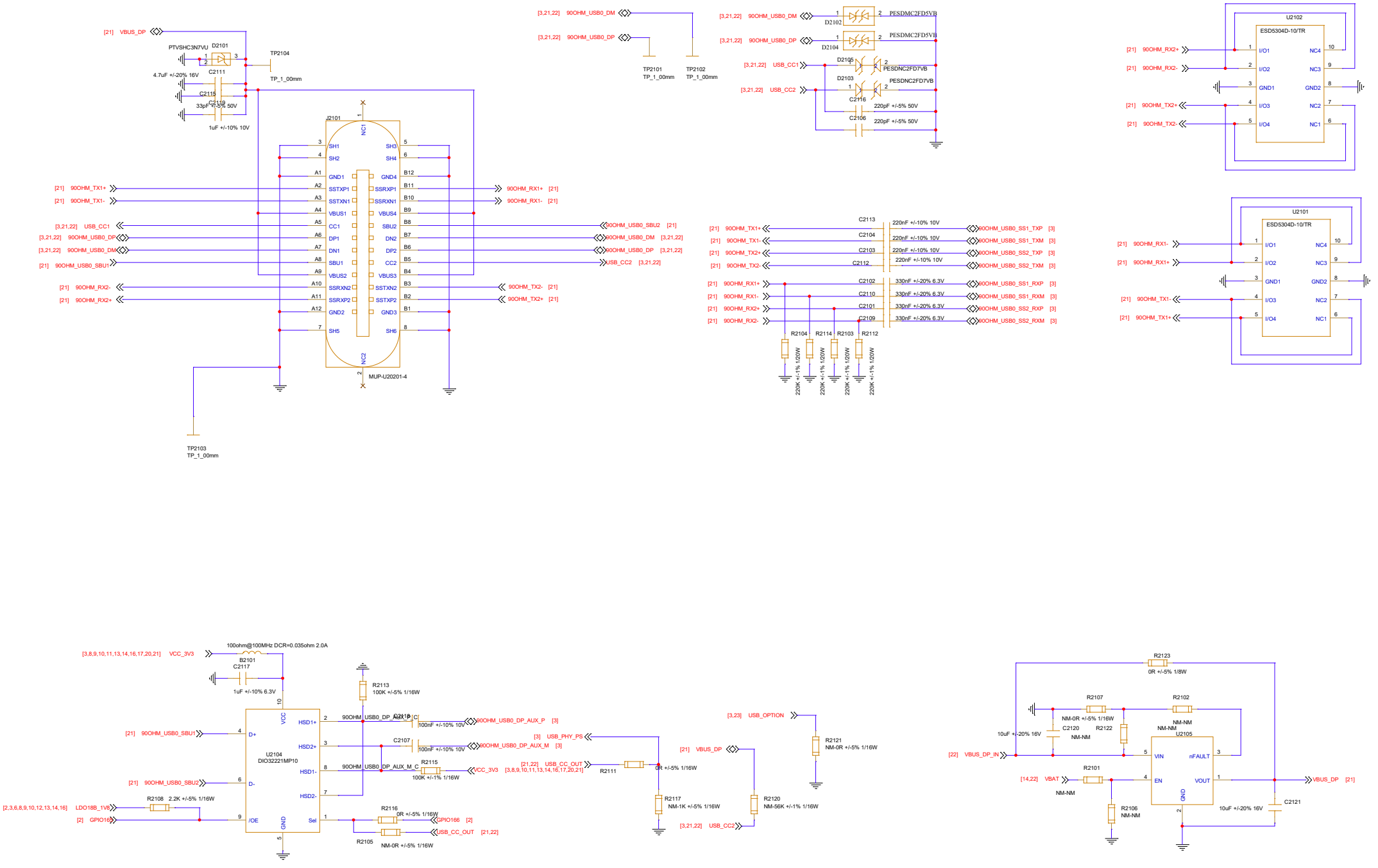

Quectel Wireless Solutions		
PROJECT: Quectel Pi H1		VER: V1.3
DRAWN BY: Weida LIU/Eliot LI	CHECKED BY: Zac WANG	SIZE: A2
DATE: Friday, November 28, 2025	SHEET: 20 OF 25	

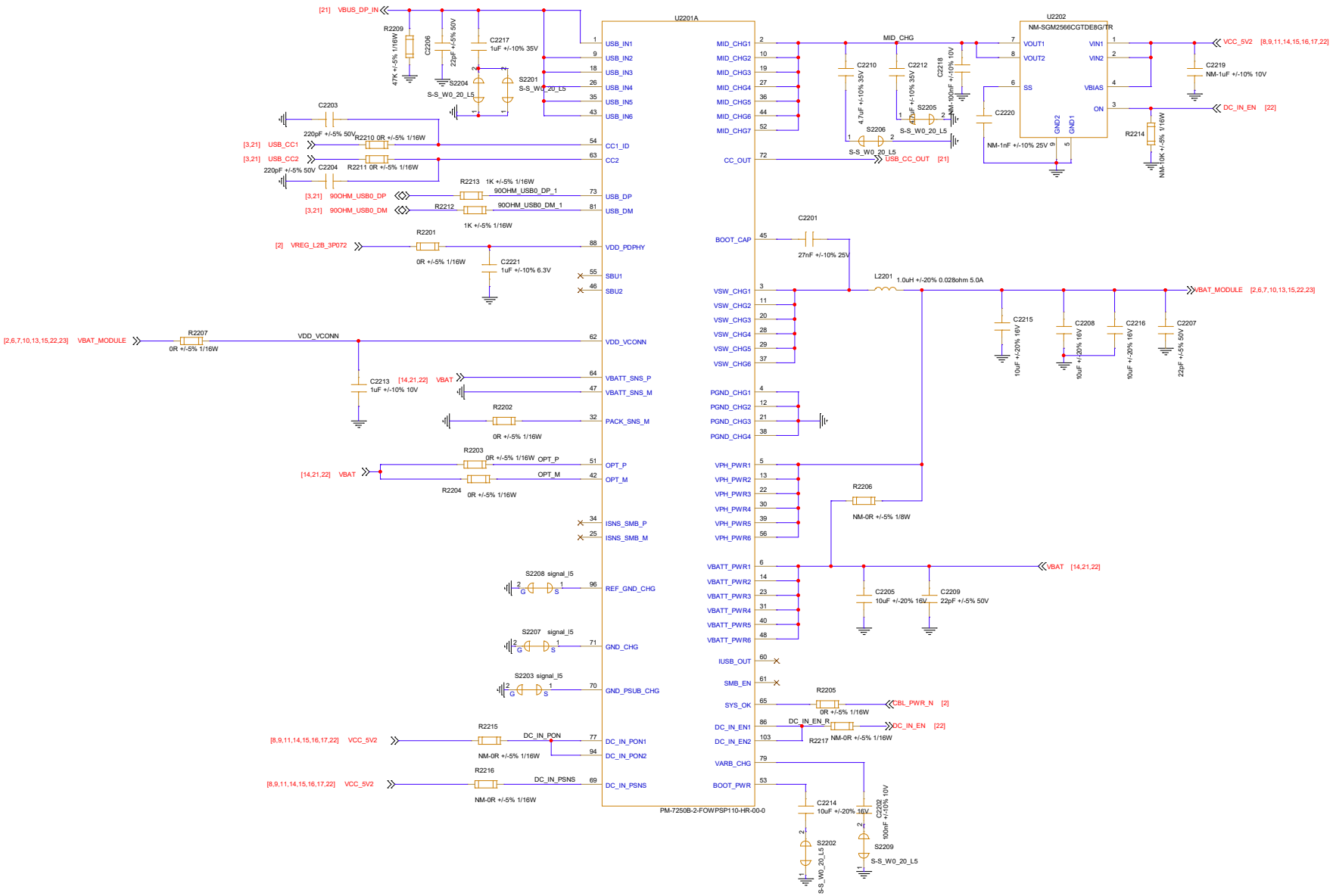

Quectel Wireless Solutions		
PROJECT: Quectel Pi H1		VER: V1.3
DRAWN BY: Weida LIU/Eliot LI	CHECKED BY: Zac WANG	SIZE: A2
DATE: Friday, November 28, 2025	SHEET: 21 OF 25	

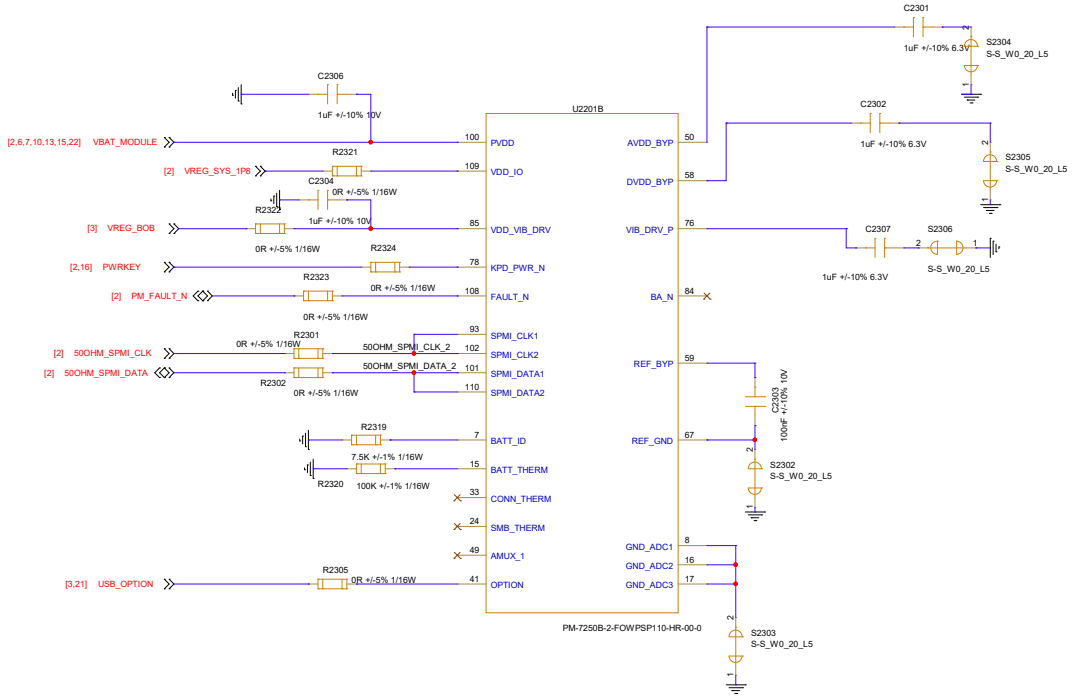

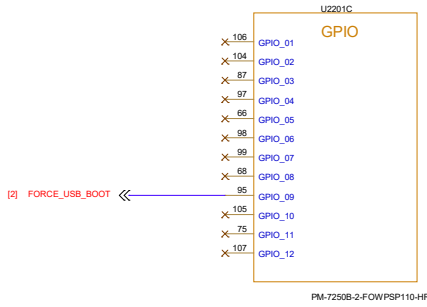

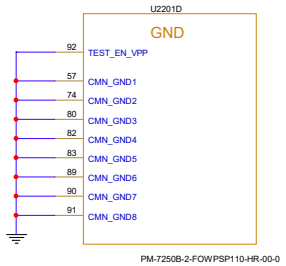

Quectel Wireless Solutions

PROJECT: Quectel Pi H1		VER: V1.3
DRAWN BY: Weida LIU/Eliot LI	CHECKED BY: Zac WANG	SIZE: A2
DATE: Friday, November 28, 2025	SHEET: 22 OF 25	